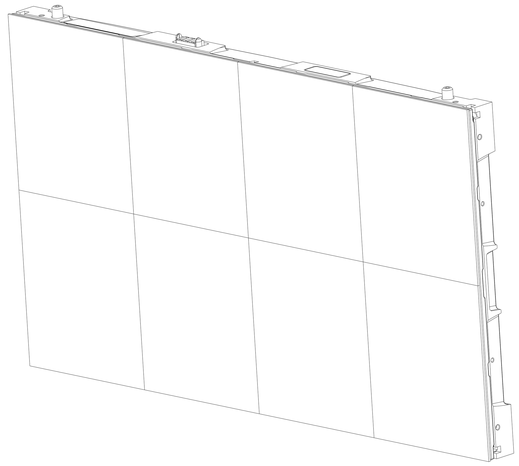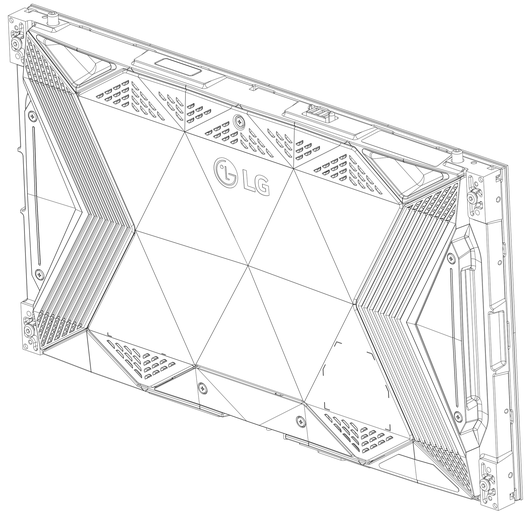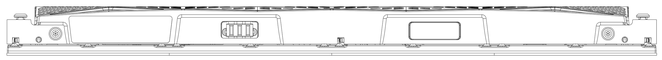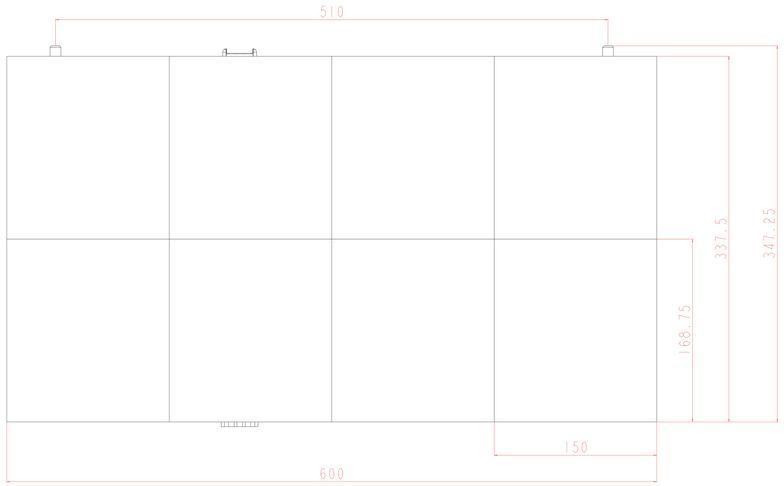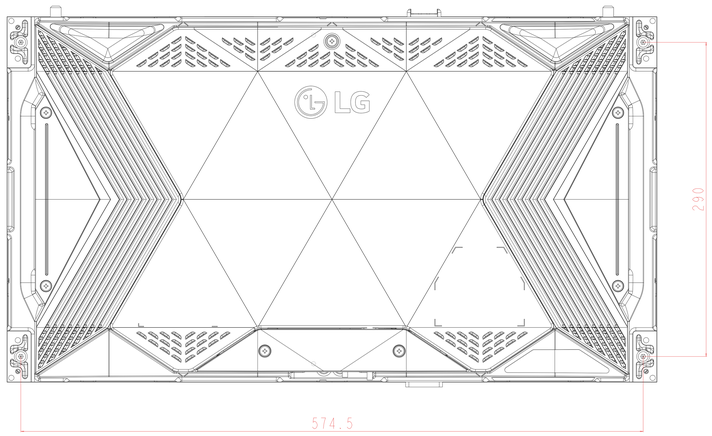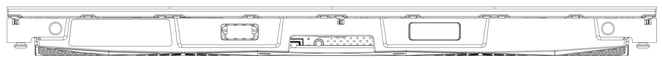Model:LSAB009-SI